WALLPOD:EV

FREE-TO-USE

Type 2, Mode 3 Charging Socket
3.6kW or 7.2kW

ROLEC
EV Charging

MANUFACTURED IN THE UK

Built-in TruePEN PME fault detection

Unit shown: WALLPOD:EV
Socket (Type 2) Charging Unit

The WALLPOD:EV is a low-cost, entry level home charging unit, designed to offer full Mode 3 fast charging to every Electric Vehicle (EV/PHEV) on the market today.

This charging unit is available with a Type 2, Mode 3 charging socket offering either 3.6kW (16A) or 7.2kW (32A) charging speeds, and is equipped with built-in TruePEN PME fault detection.

PRODUCT FEATURES

- Mode 3 (IEC 61851-1) fast charging
- Type 2 (IEC 62196) charging socket
- 3.6kW (16A) & 7.2kW (32A) charging speeds
- Built-in overload and fault current protection (Type A RCBO)
- Built-in TruePEN PME fault detection, no earth electrode/rod required
- Built-in DC sensitive protective device
- Built-in LED charging status indicator
- Easy to install and maintain
- IP Rated
- UV stabilised
- Corrosion resistant
- Fire retardant
- IK10 impact resistant design

Type 2 Connector

Colour Options Available

No Earth Rod Required

IP Rated & UV Stabilised

IK10 Impact Rating

Flame Retardant

SPECIFICATIONS

Product Code	EVWP2010-PEN	EVWP2020-PEN
Charging Socket	Type 2 (IEC 62196)	
AC Charging Output	3.6kW (16A)	7.2kW (32A)
Charge Protocol	Mode 3	
Overload & Fault Current Protection	Built-in 20A, 30mA Type A RCBO & Built-in 6mA DC Sensitive Device	Built-in 40A, 30mA Type A RCBO & Built-in 6mA DC Sensitive Device
Earthing	Built-in TruePEN PME Fault Detection	
Input Supply	16A 230V AC/50Hz (Single Phase)	32A 230V AC/50Hz (Single Phase)
Cable Terminals	3x 16mm	
Standby Consumption	Approx 0.05kWh per day	
Certifications & Compliances	EV Charging Compliance – EN 61851-1:2019, EN 61851-22:2002	
	Wiring Regulations – BS 7671:2018	
	EMC Compliance – EN 61000-6-3:2007+A1:2011, EN 61000-6-2:2005	
	Safety Compliance (LVD) – EN 62368-1:2014, 2014/35/EU (The Electrical Equipment [Safety] Regulations 2016)	
	Environmental Protection – Enclosure IP65, Socket IP54 (BS EN 60529:1992+A2:2013), Enclosure IK10 (EN 60068-2-75:2014)	
	RCBO – IEC 61009-1:2010+A1+A2+A11+A12, IEC 61009-2-2:1991	
	Contactor – IEC 60947-4-1:2018, IEC 61095:2009	
UK CA CE	RoHS – 2011/65/EU (The Restriction of the Use of Certain Hazardous Substances in Electrical and Electronic Equipment Regulations 2012)	
	REACH – 1907/2006 (UK REACH)	
Dimensions	179mm x 367mm x 142mm (W x H x D)	
Unit Material	Polycarbonate (303 EP-22)	
Operating Temperature	-30°C to +50°C	
Standard Base Colour	Warm White (Other colours available upon request)	
Standard Pod Colour	Green (Other colours available upon request)	

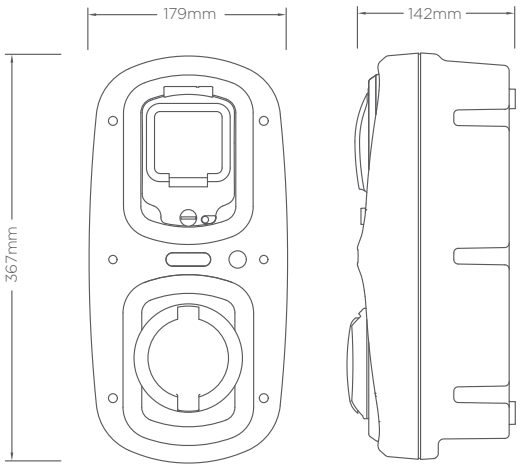

TruePEN *Safer by design*

- Automatically monitors the supply voltage on both 230V & 240V supplies without the need for any manual dipswitch settings.
- Within 5 seconds in the event of an under-voltage of less than 207V or an over-voltage of more than 253V Live, Neutral & Earth will be isolated.
- Following an under-voltage isolation, TruePEN will automatically reset when normal operating range is restored.
- Following an over-voltage isolation, on the grounds of safety, TruePEN will require a manual reset.

See the TruePEN Overview for details

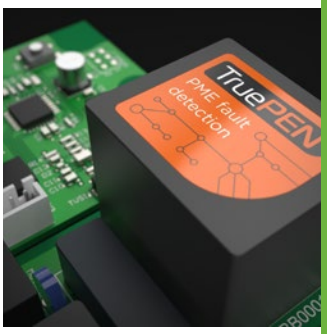

OPTIONS & ACCESSORIES

- Key switch control charging
- Lockable door to switchgear
- Built-in class 1 **MID** compliant kWh meter
- Built-in time clock providing charge time management
- Corporate branding (colours, logo badge, etc.)
- Amp-Selector key switch (switches between 16A or 32A)
- Charge-By-Solar switch (switches between 6A, 13A, 16A or 32A)
- Charge point signage
- EV charging cables (Type 1 to Type 2 or Type 2 to Type 2)

Head office contact:
t: +44 (0) 1205 724754
f: +44 (0) 1205 724876
rolec@rolecserv.co.uk

Rolec Services Ltd
Ralphs Lane, Frampton West
Boston, Lincolnshire
UK. PE20 1QU

@RolecEV
/Rolec-Services
www.rolecserv.com

WALLPOD:EV

FREE-TO-USE

Type 1, Mode 3 Tethered Lead
3.6kW or 7.2kW

ROLEC
EV Charging

MANUFACTURED IN THE UK

Built-in TruePEN PME fault detection

Unit shown: WALLPOD:EV
Tethered (Type 1) Charging Unit

The WALLPOD:EV is a low-cost, entry level home charging unit, designed to offer full Mode 3 fast charging to every Electric Vehicle (EV/PHEV) on the market today.

This Type 1 tethered lead charging unit offers either 3.6kW (16A) or 7.2kW (32A) Mode 3 charging speeds, and is equipped with built-in TruePEN PME fault detection.

PRODUCT FEATURES

- Mode 3 (IEC 61851-1) fast charging
- Type 1 (J1772) tethered lead (available in two lengths) & lead holder
- 3.6kW (16A) & 7.2kW (32A) charging speeds
- Built-in overload and fault current protection (Type A RCBO)
- Built-in TruePEN PME fault detection, no earth electrode/rod required
- Built-in DC sensitive protective device
- Built-in LED charging status indicator
- Easy to install and maintain
- IP Rated
- UV stabilised
- Corrosion resistant
- Fire retardant
- IK10 impact resistant design

Type 1 Tethered Lead

Colour Options Available

No Earth Rod Required

IK10 Impact Rating

IP Rated & UV Stabilised

Flame Retardant

SPECIFICATIONS

Product Code	EVWP1080-PEN	EVWP1085-PEN	EVWP1140-PEN	EVWP1145-PEN
Charging Gun	Type 1 (J1772)			
Charging Cable Length	5m (approx. 4.5m external)	10m (approx. 9.5m external)	5m (approx. 4.5m external)	10m (approx. 9.5m external)
AC Charging Output	3.6kW (16A)		7.2kW (32A)	
Charge Protocol	Mode 3			
Overload & Fault Current Protection	Built-in 20A, 30mA Type A RCBO & Built-in 6mA DC Sensitive Device		Built-in 40A, 30mA Type A RCBO & Built-in 6mA DC Sensitive Device	
Earthing	Built-in TruePEN PME Fault Detection			
Input Supply	16A 230V AC/50Hz (Single Phase)		32A 230V AC/50Hz (Single Phase)	
Cable Terminals	3x 16mm			
Standby Consumption	Approx 0.05kWh per day			
Certifications & Compliances	EV Charging Compliance – EN 61851-1:2019, EN 61851-22:2002			
	Wiring Regulations – BS 7671:2018			
	EMC Compliance – EN 61000-6-3:2007+A1:2011, EN 61000-6-2:2005			
	Safety Compliance (LVD) – EN 62368-1:2014, 2014/35/EU (The Electrical Equipment [Safety] Regulations 2016)			
	Environmental Protection – Enclosure IP65, Enclosure IK10 (EN 60068-2-75:2014)			
	RCBO – IEC 61009-1:2010+A1+A2+A11+A12, IEC 61009-2-2:1991			
	Contactor – IEC 60947-4-1:2018, IEC 61095:2009			
	Cables – BS 6004:2012+A1:2020			
UK CA CE	RoHS – 2011/65/EU (The Restriction of the Use of Certain Hazardous Substances in Electrical and Electronic Equipment Regulations 2012)			
	REACH – 1907/2006 (UK REACH)			
Dimensions	179mm x 415.5mm x 142mm (W x H x D)			
Unit Material	Polycarbonate (303 EP-22)			
Operating Temperature	-30°C to +50°C			
Standard Base Colour	Warm White (Other colours available upon request)			
Standard Pod Colour	Green (Other colours available upon request)			

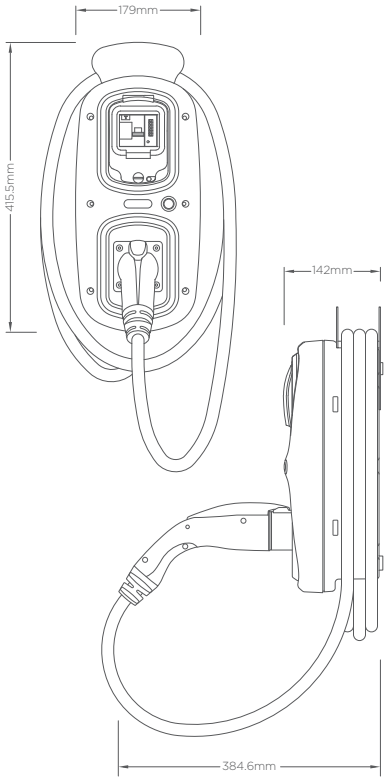

TruePEN *Safer by design*

- Automatically monitors the supply voltage on both 230V & 240V supplies without the need for any manual dipswitch settings.
- Within 5 seconds in the event of an under-voltage of less than 207V or an over-voltage of more than 253V Live, Neutral & Earth will be isolated.
- Following an under-voltage isolation, TruePEN will automatically reset when normal operating range is restored.
- Following an over-voltage isolation, on the grounds of safety, TruePEN will require a manual reset.

See the TruePEN Overview for details

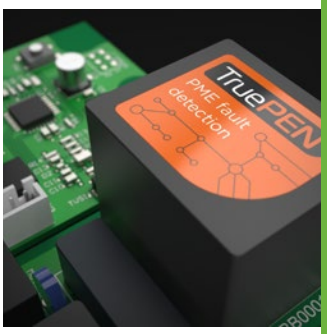

OPTIONS & ACCESSORIES

- Key switch control charging
- Lockable door to switchgear
- Built-in class 1 **MID** compliant kWh meter
- Built-in time clock providing charge time management
- Corporate branding (colours, logo badge, etc.)
- Amp-Selector key switch (switches between 16A or 32A)
- Charge-By-Solar switch (switches between 6A, 13A, 16A or 32A)
- Charge point signage
- Wall mounted charging gun holster

Head office contact:
t: +44 (0) 1205 724754
f: +44 (0) 1205 724876
rolec@rolecserv.co.uk

Rolec Services Ltd
Ralphs Lane, Frampton West
Boston, Lincolnshire
UK. PE20 1QU

@RolecEV
/Rolec-Services
www.rolecserv.com

WALLPOD:EV

FREE-TO-USE

Type 2, Mode 3 Tethered Lead
3.6kW or 7.2kW

ROLEC
EV Charging

MANUFACTURED IN THE UK

Built-in TruePEN PME fault detection

Unit shown: WALLPOD:EV
Tethered (Type 2) Charging Unit

The WALLPOD:EV is a low-cost, entry level home charging unit, designed to offer full Mode 3 fast charging to every Electric Vehicle (EV/PHEV) on the market today.

This Type 2 tethered lead charging unit offers either 3.6kW (16A) or 7.2kW (32A) Mode 3 charging speeds, and is equipped with built-in TruePEN PME fault detection.

PRODUCT FEATURES

- Mode 3 (IEC 61851-1) fast charging
- Type 1 (J1772) tethered lead (available in two lengths) & lead holder
- 3.6kW (16A) & 7.2kW (32A) charging speeds
- Built-in overload and fault current protection (Type A RCBO)
- Built-in TruePEN PME fault detection, no earth electrode/rod required
- Built-in DC sensitive protective device
- Built-in LED charging status indicator
- Easy to install and maintain
- IP Rated
- UV stabilised
- Corrosion resistant
- Fire retardant
- IK10 impact resistant design

Type 2 Tethered Lead

Colour Options Available

No Earth Rod Required

IK10 Impact Rating

IP Rated & UV Stabilised

Flame Retardant

SPECIFICATIONS

Product Code	EVWP2080-PEN	EVWP2085-PEN	EVWP2140-PEN	EVWP2145-PEN
Charging Gun	Type 2 (IEC 62196)			
Charging Cable Length	5m (approx. 4.5m external)	10m (approx. 9.5m external)	5m (approx. 4.5m external)	10m (approx. 9.5m external)
AC Charging Output	3.6kW (16A)		7.2kW (32A)	
Charge Protocol	Mode 3			
Overload & Fault Current Protection	Built-in 20A, 30mA Type A RCBO & Built-in 6mA DC Sensitive Device		Built-in 40A, 30mA Type A RCBO & Built-in 6mA DC Sensitive Device	
Earthing	Built-in TruePEN PME Fault Detection			
Input Supply	16A 230V AC/50Hz (Single Phase)		32A 230V AC/50Hz (Single Phase)	
Cable Terminals	3x 16mm			
Standby Consumption	Approx 0.05kWh per day			
Certifications & Compliances	EV Charging Compliance – EN 61851-1:2019, EN 61851-22:2002			
	Wiring Regulations – BS 7671:2018			
	EMC Compliance – EN 61000-6-3:2007+A1:2011, EN 61000-6-2:2005			
	Safety Compliance (LVD) – EN 62368-1:2014, 2014/35/EU (The Electrical Equipment [Safety] Regulations 2016)			
	Environmental Protection – Enclosure IP65, Enclosure IK10 (EN 60068-2-75:2014)			
	RCBO – IEC 61009-1:2010+A1+A2+A11+A12, IEC 61009-2-2:1991			
	Contactor – IEC 60947-4-1:2018, IEC 61095:2009			
	Cables – BS 6004:2012+A1:2020			
UK CA CE	RoHS – 2011/65/EU (The Restriction of the Use of Certain Hazardous Substances in Electrical and Electronic Equipment Regulations 2012)			
	REACH – 1907/2006 (UK REACH)			
Dimensions	179mm x 415.5mm x 142mm (W x H x D)			
Unit Material	Polycarbonate (303 EP-22)			
Operating Temperature	-30°C to +50°C			
Standard Base Colour	Warm White (Other colours available upon request)			
Standard Pod Colour	Green (Other colours available upon request)			

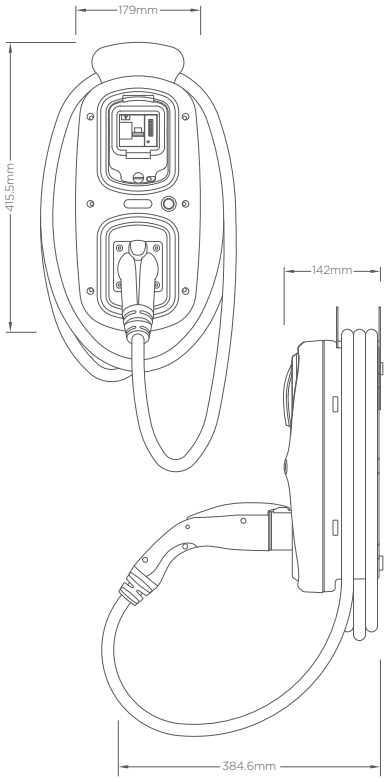

TruePEN *Safer by design*

- Automatically monitors the supply voltage on both 230V & 240V supplies without the need for any manual dipswitch settings.
- Within 5 seconds in the event of an under-voltage of less than 207V or an over-voltage of more than 253V Live, Neutral & Earth will be isolated.
- Following an under-voltage isolation, TruePEN will automatically reset when normal operating range is restored.
- Following an over-voltage isolation, on the grounds of safety, TruePEN will require a manual reset.

See the TruePEN Overview for details

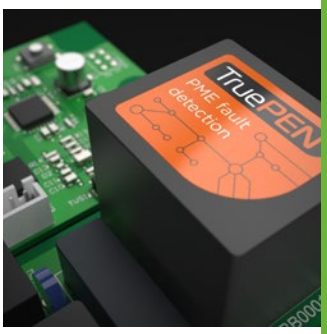

OPTIONS & ACCESSORIES

- Key switch control charging
- Lockable door to switchgear
- Built-in class 1 **MID** compliant kWh meter
- Built-in time clock providing charge time management
- Corporate branding (colours, logo badge, etc.)
- Amp-Selector key switch (switches between 16A or 32A)
- Charge-By-Solar switch (switches between 6A, 13A, 16A or 32A)
- Charge point signage
- Wall mounted charging gun holster

Head office contact:
t: +44 (0) 1205 724754
f: +44 (0) 1205 724876
rolec@rolecserv.co.uk

Rolec Services Ltd
Ralphs Lane, Frampton West
Boston, Lincolnshire
UK. PE20 1QU

@RolecEV
/Rolec-Services
www.rolecserv.com